Electrolux PROFESSIONAL

Modular Cooking Range Line thermaline 90 - 14 lt Well Freestanding Gas Deep Fat Fryer, 1 Side H=800

ITEM #

MODEL #

NAME #

SIS #

AIA #

589506 (MCFHFADDPO) 14lt gas Deep Fat Fryer, one-side operated

Short Form Specification

Item No.

Unit constructed according to DIN 18860_2 with 20 mm drop nose top and 70 mm recessed plinth. Internal frame for heavy duty sturdiness in stainless steel. 2 mm top in 1.4301 (AISI 304). Flat surface construction, easily cleanable. THERMODUL connection system enables seamless worktop when units are connected and avoids soil penetrating. Appliance designed to deep fry meat, fish and vegetables (french fries). Deep drawn V-shaped well with thermostatic regulation of oil temperature up to a maximum of 185 °C. Electrical ignition powered by battery with thermocouple for added safety. Flame failure device on each burner, with safety thermostat and thermostatic control. Reduced power setting to melt solid fat. Oil can be easily drained via a ball-valve. All-round basin raised edges to protect against soil infiltration. Large overflow stamped area around the well. Overheat protection switches off the supply in case of overheating. Metal knobs with embedded hygienic silicon "soft" grip enable easier handling and cleaning.
IPX4 water resistant certification.
Configuration: Freestanding, One-side operated.

APPROVAL:

Main Features

- THERMODUL connection system creates a seamless work top when units are connected to each other thus avoiding soil penetrating vital components and facilitating the removal of units in case of replacement or service.
- Metal knobs with embedded hygienic silicon "soft" grip for easier handling and cleaning. The special design of the controls prevent infiltration of liquids or soil into vital components.
- Large visible digital display manufactured in tempered glass to resist heat and chemicals, showing temperatures or power settings. The display also shows on/off status of the appliance and on/off status of the heating elements.
- Raised edge all around the well to protect from infiltration of dirt from worktop.
- Electrical ignition powered by battery with thermocouple for added safety.
- Overheat protection: a temperature sensor switches off the supply in case of overheating.
- Indirect oil heating system and uniform heat distribution to guarantee extended oil life.
- Large overflow stamped area, located around the well.
- External heating elements allow to easily clean the well.
- Flame failure device on each burner.
- Deep drawn V-Shaped well.
- Thermostatic regulation of oil temperature up to a maximum of 185 °C.
- Safety thermostat and thermostatic control.
- All major components may be easily accessed from the front.
- Reduced power setting to melt solid fat.
- Oil level mark for MAX/MIN filling.
- Designed for deep fat frying of meat, fish, specialities and vegetable (french fries, chips).
- Oil can be drained off via a ball-valve with a lock to prevent unintentional opening. When opened, the ball valve provides a full cross-section opening to easily clean the drainage system.
- Optional portable oil quality monitoring tool (code 9B8081) for efficient oil management.

Construction

- 2 mm top in 1.4301 (AISI 304).
- Unit constructed according to DIN 18860_2 with 20 mm drop nose top and 70 mm recessed plinth.
- Flat surface construction with minimal hidden areas to easily clean all surfaces
- IPx4 water protection.
- Internal frame for heavy duty sturdiness in stainless steel.

Modular Cooking Range Line thermaline 90 - 14 lt Well Freestanding Gas Deep Fat Fryer, 1 Side H=800

Front

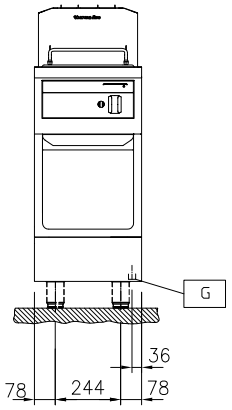

Side

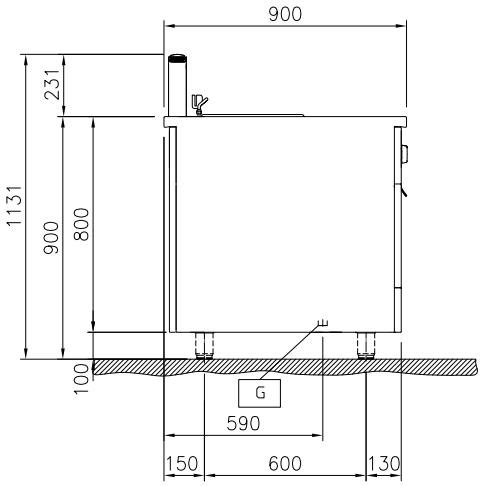

EQ = Equipotential screw
G = Gas connection

Top

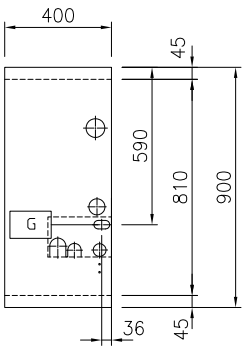

Gas

Gas Power:	
589506 (MCFHFADDPO)	14 kW
Gas Type Option:	
Gas Inlet:	1/2"

Key Information:

Configuration:	On Base;One-Side Operated
Number of wells:	1
Usable well dimensions (width):	240 mm
Usable well dimensions (height):	225 mm
Usable well dimensions (depth):	380 mm
Well capacity:	12 lt MIN; 14 lt MAX
Thermostat Range:	120 °C MIN; 190 °C MAX
External dimensions, Width:	400 mm
External dimensions, Depth:	900 mm
External dimensions, Height:	800 mm
Net weight:	85 kg

The company reserves the right to make modifications to the products without prior notice. All information correct at time of printing.

2024.10.06

Included Accessories

- 1 of 1 basket for 14tl deep fat fryer PNC 913151

Optional Accessories

- Discharge vessel for 14 & 23lt fryers PNC 911570 ❑
- Lid for discharge vessel 14 & 23lt fryers PNC 911585 ❑
- Connecting rail kit, 900mm PNC 912502 ❑
- Stainless steel side panel, 900x800mm, freestanding PNC 912511 ❑
- Portioning shelf, 400mm width PNC 912522 ❑
- Portioning shelf, 400mm width PNC 912552 ❑
- Folding shelf, 300x900mm PNC 912581 ❑
- Folding shelf, 400x900mm PNC 912582 ❑
- Fixed side shelf, 200x900mm PNC 912589 ❑
- Fixed side shelf, 300x900mm PNC 912590 ❑
- Fixed side shelf, 400x900mm PNC 912591 ❑
- Stainless steel front kicking strip, 400mm width PNC 912594 ❑
- Stainless steel side kicking strips left and right, freestanding, 900mm width PNC 912621 ❑
- Stainless steel side kicking strips left and right, back-to-back, 1810mm width PNC 912627 ❑
- Stainless steel plinth, freestanding, 400mm width PNC 912916 ❑
- Connecting rail kit: modular 90 (on the left) to ProThermetic tilting (on the right), ProThermetic stationary (on the left) to ProThermetic tilting (on the right) PNC 912975 ❑
- Connecting rail kit: modular 80 (on the right) to ProThermetic tilting (on the left), ProThermetic stationary (on the right) to ProThermetic tilting (on the left) PNC 912976 ❑
- Endrail kit, flush-fitting, left PNC 913111 ❑
- Endrail kit, flush-fitting, right PNC 913112 ❑
- Filter for deep fat fryer oil collection basin PNC 913146 ❑
- 2 baskets for 14tl deep fat fryer PNC 913152 ❑
- Endrail kit (12.5mm) for thermaline 90 units, left PNC 913202 ❑
- Endrail kit (12.5mm) for thermaline 90 units, right PNC 913203 ❑
- Stainless steel side panel, left, H=800, flush PNC 913224 ❑
- Stainless steel side panel, left, H=800, flush PNC 913225 ❑
- T-connection rail for back-to-back installations without backsplash PNC 913227 ❑
- Insert profile d=900 PNC 913232 ❑
- Endrail kit, (12.5mm), for back-to-back installation, left PNC 913251 ❑
- Endrail kit, (12.5mm), for back-to-back installation, right PNC 913252 ❑
- Endrail kit, flush-fitting, for back-to-back installation, left PNC 913255 ❑
- Endrail kit, flush-fitting, for back-to-back installation, right PNC 913256 ❑
- Side reinforced panel only in combination with side shelf, for freestanding units PNC 913259 ❑
- Side reinforced panel only in combination with side shelf, for back-to-back installations, left PNC 913277 ❑
- Side reinforced panel only in combination with side shelf, for back-to-back installation, right PNC 913278 ❑
- Stainless steel dividing panel, 900x800mm, (it should only be used between Electrolux Professional thermaline Modular 90 and thermaline C90) PNC 913673 ❑
- Stainless steel side panel, 900x800mm, flush-fitting (it should only be used against the wall, against a niche and in between Electrolux Professional thermaline and ProThermetic appliances and external appliances - provided that these have at least the same dimensions) PNC 913689 ❑
- Gas mainswitch for modular H800 gas units (factory fitted) PNC 913698 ❑

The company reserves the right to make modifications to the products without prior notice. All information correct at time of printing.